SKR.TK.19/1

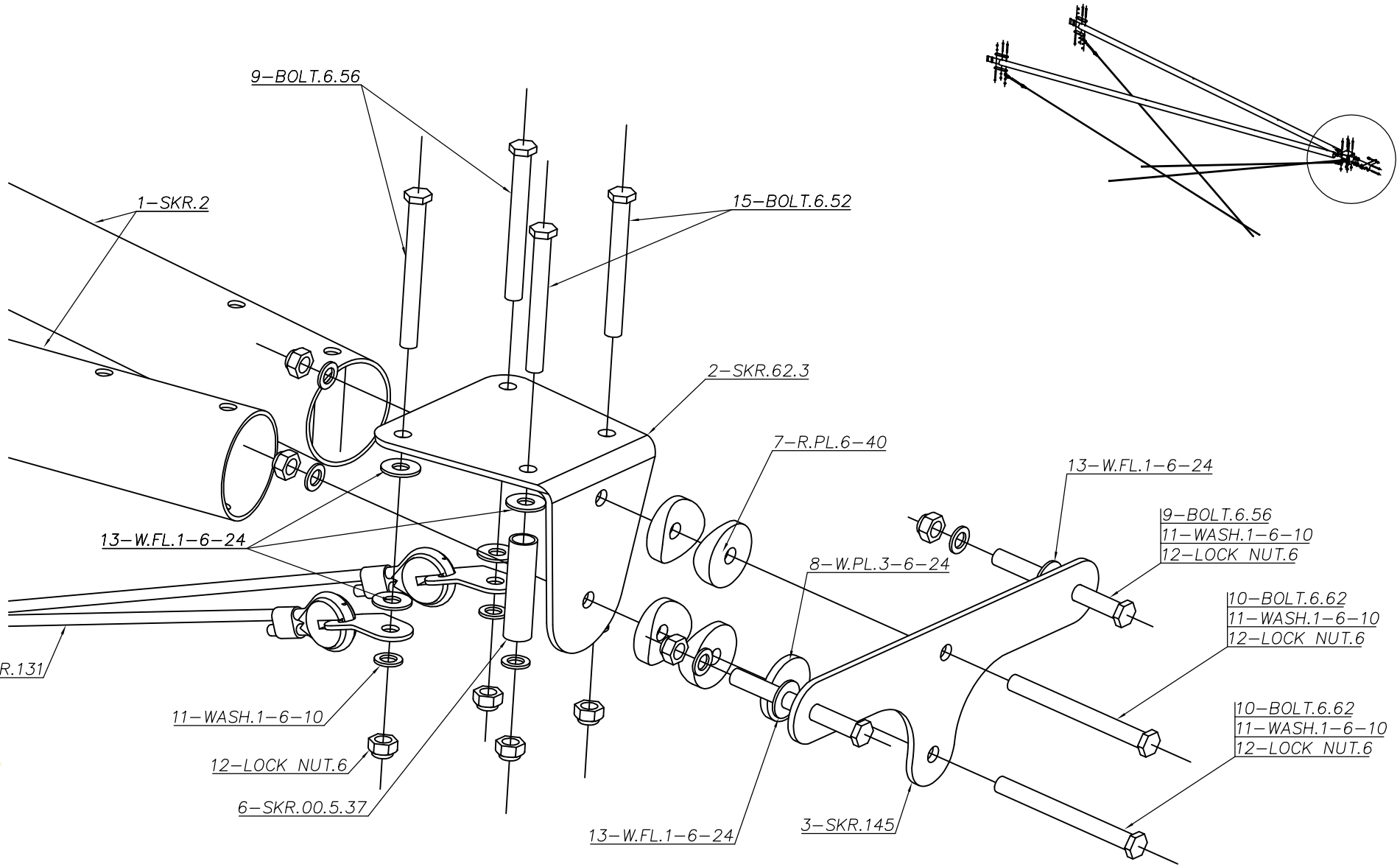

StexUpéry BASE ULM

SKR.TK.19/2 BK

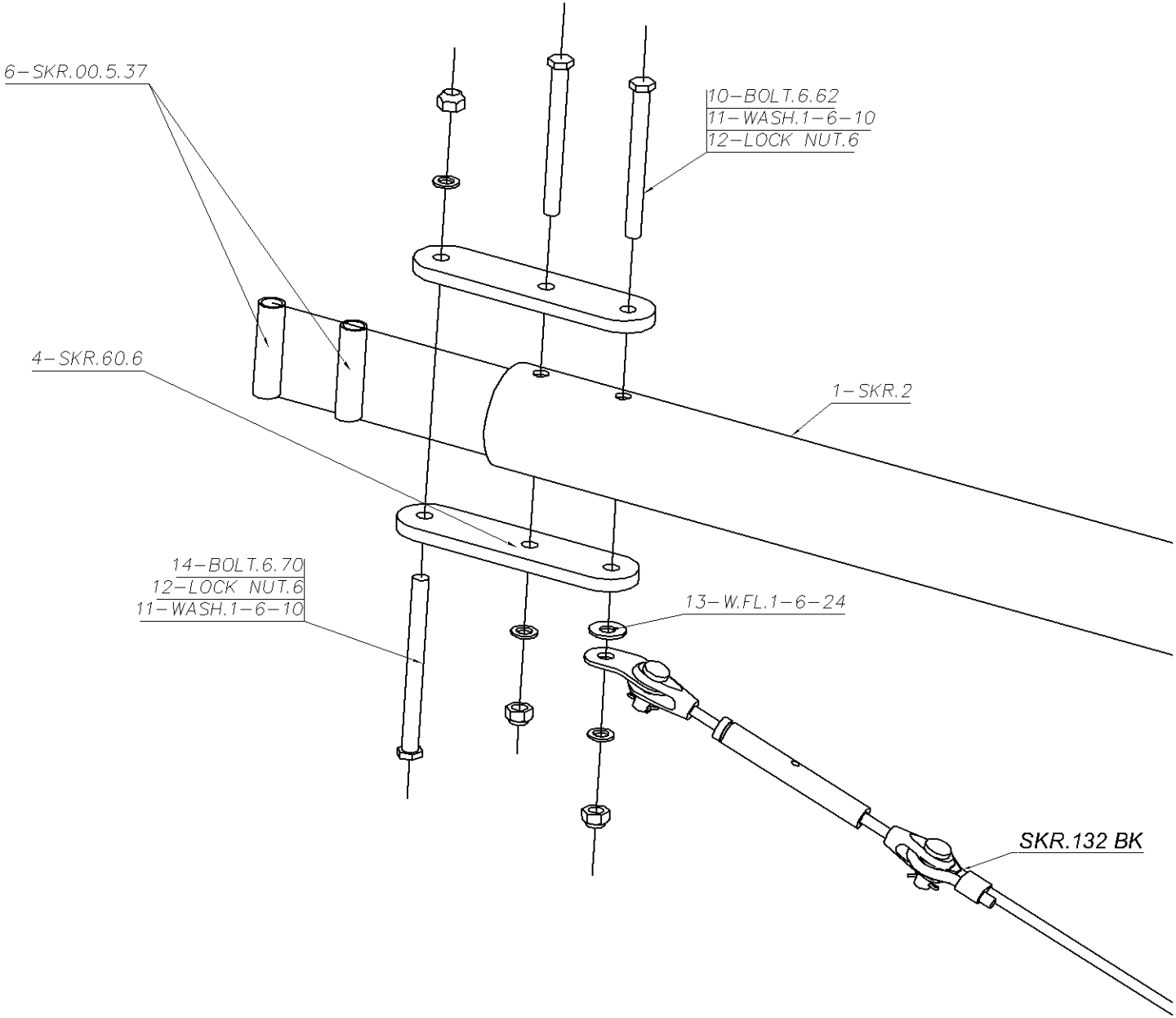
6-SKR.00.5.37
10-BOLT.6.62
11-WASH.1-6-10
12-LOCK NUT.6
4-SKR.60.6
1-SKR.2
14-BOLT.6.70
12-LOCK NUT.6
11-WASH.1-6-10
13-W.FL.1-6-24
SKR.132 BK

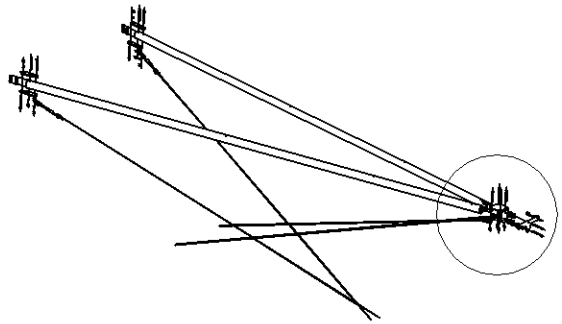

SKR.TK.19/2

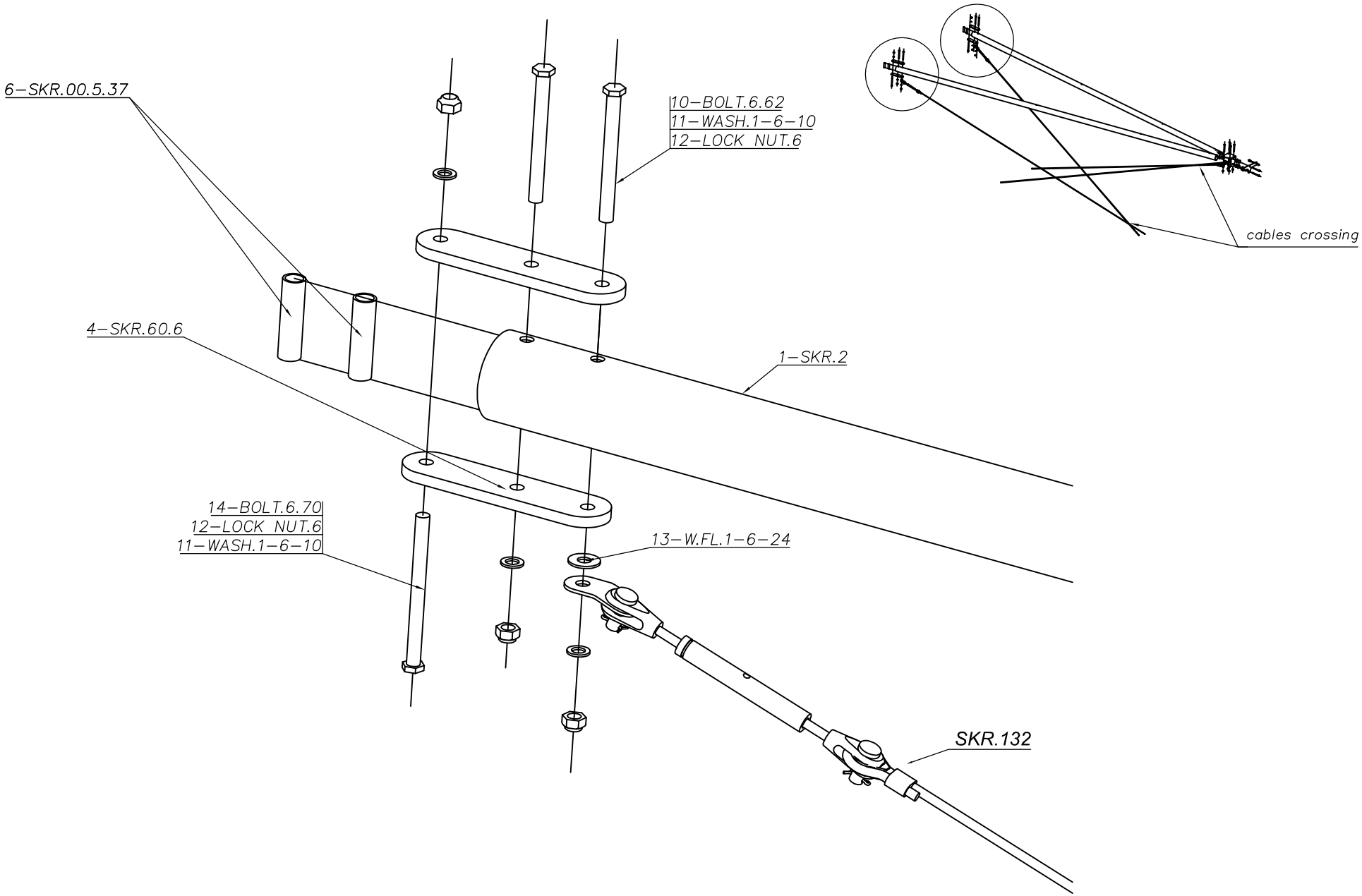

StExupéry BASE ULM

SKR.TK.20/1

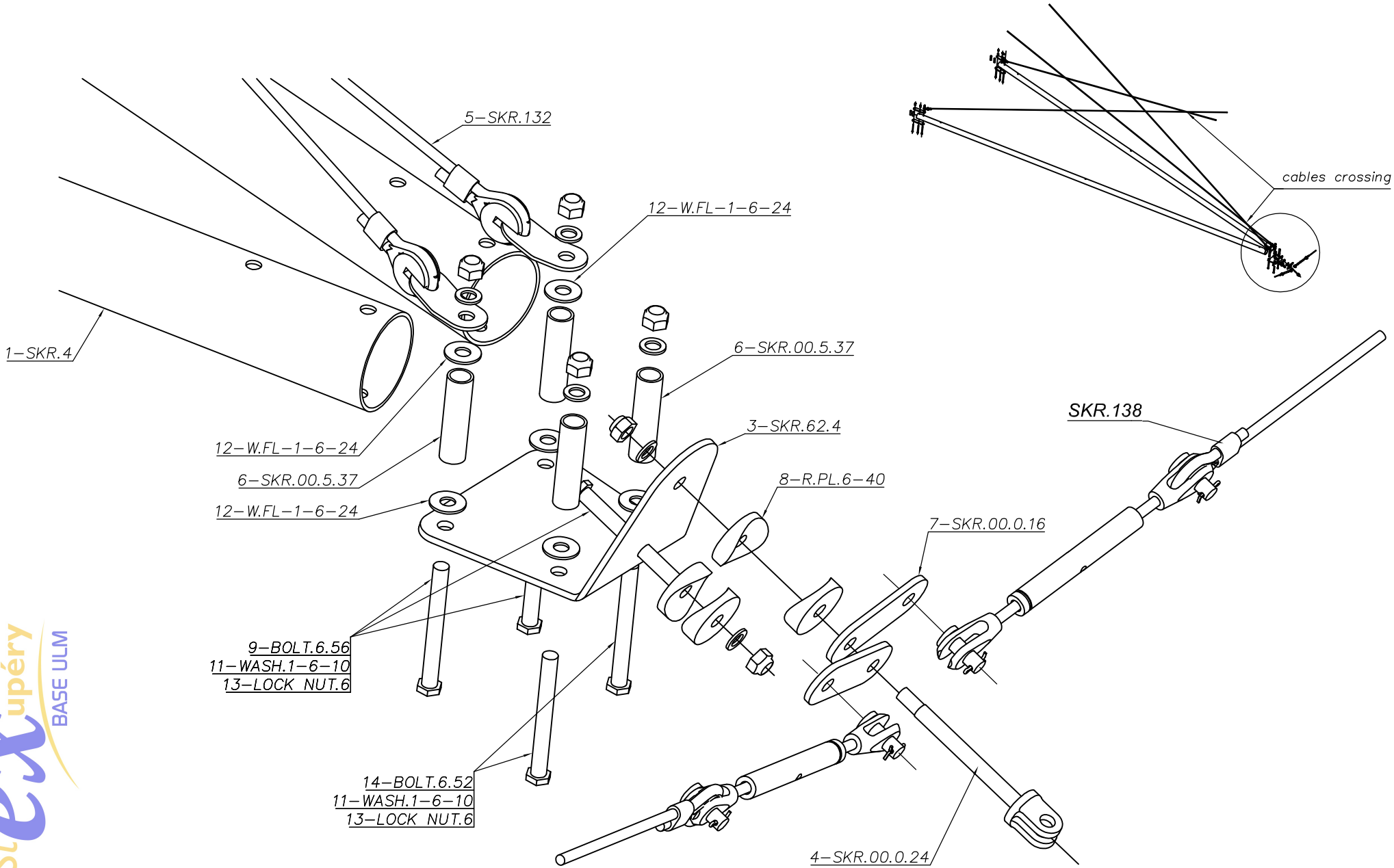

StexUpéry BASE ULM

SKR.TK.20/2

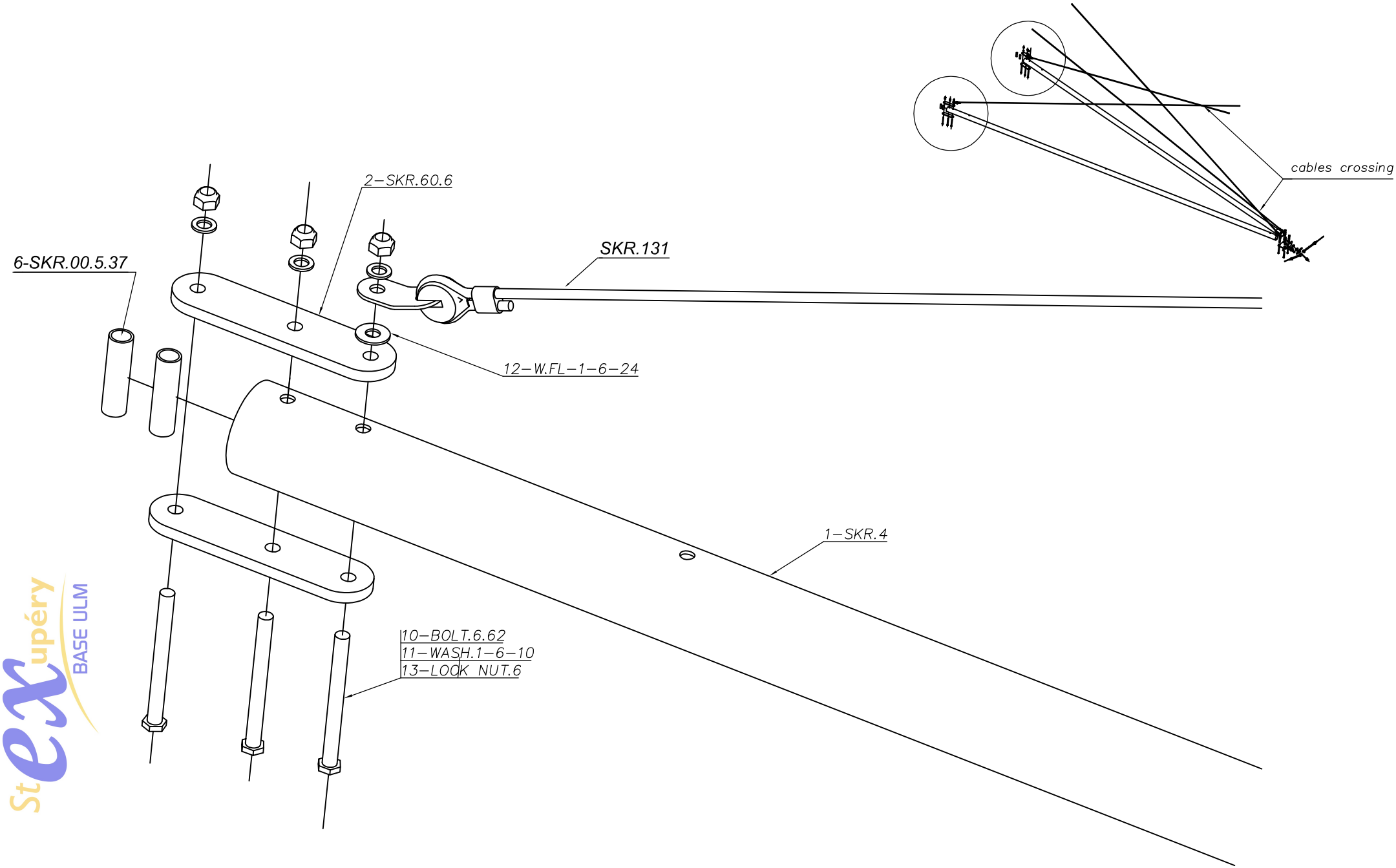

StexUpéry BASE ULM

SKR.TK.21

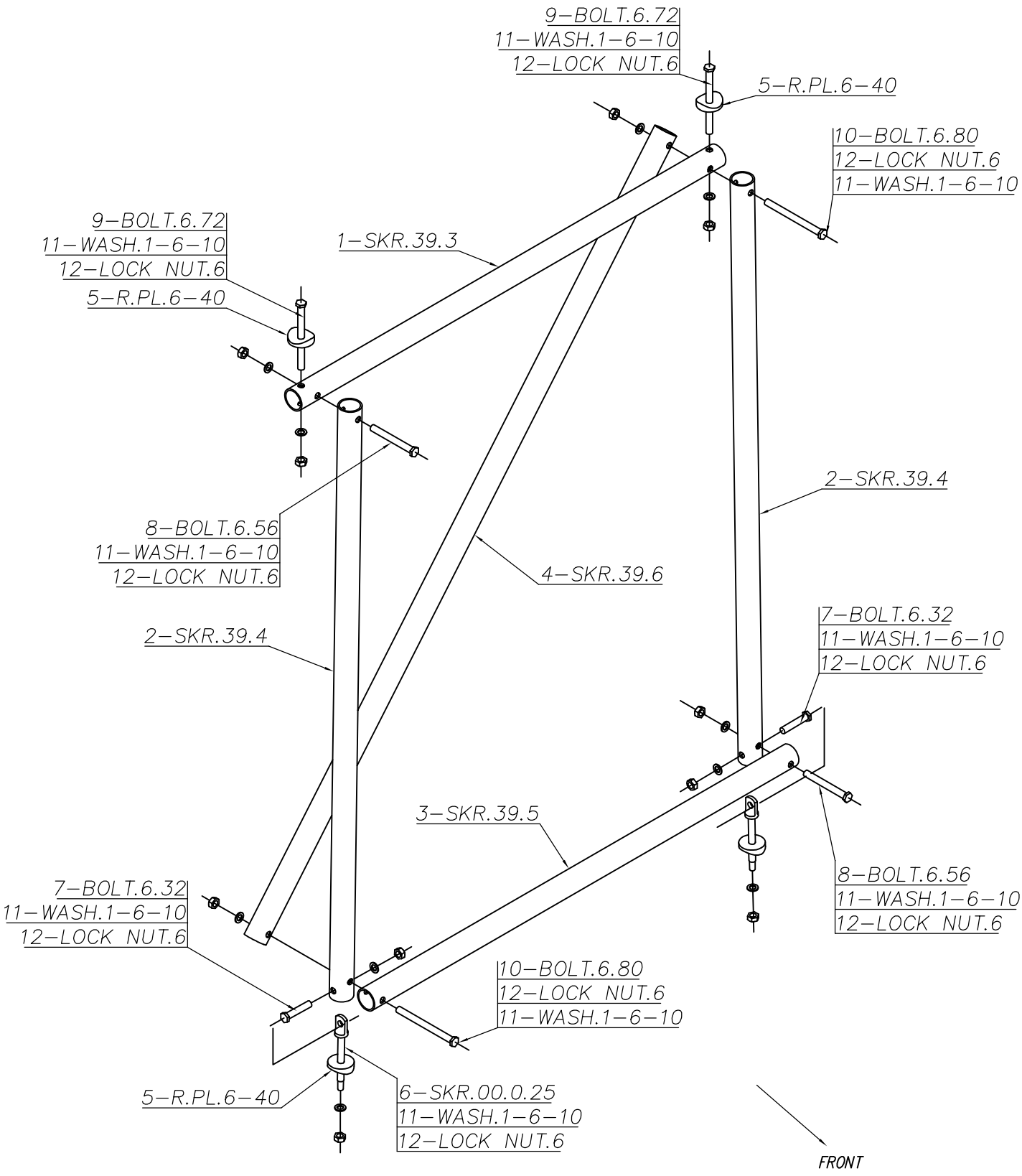
9–BOLT.6.72
11–WASH.1–6–10
12–LOCK NUT.6
5–R.PL.6–40
10–BOLT.6.80
12–LOCK NUT.6
11–WASH.1–6–10
9–BOLT.6.72
11–WASH.1–6–10
12–LOCK NUT.6
5–R.PL.6–40
1–SKR.39.3
2–SKR.39.4
8–BOLT.6.56
11–WASH.1–6–10
12–LOCK NUT.6
4–SKR.39.6
7–BOLT.6.32
11–WASH.1–6–10
12–LOCK NUT.6
2–SKR.39.4
3–SKR.39.5
8–BOLT.6.56
11–WASH.1–6–10
12–LOCK NUT.6
7–BOLT.6.32
11–WASH.1–6–10
12–LOCK NUT.6
10–BOLT.6.80
12–LOCK NUT.6
11–WASH.1–6–10
5–R.PL.6–40
6–SKR.00.0.25
11–WASH.1–6–10
12–LOCK NUT.6
FRONT

SKR.TK.21 BAZ

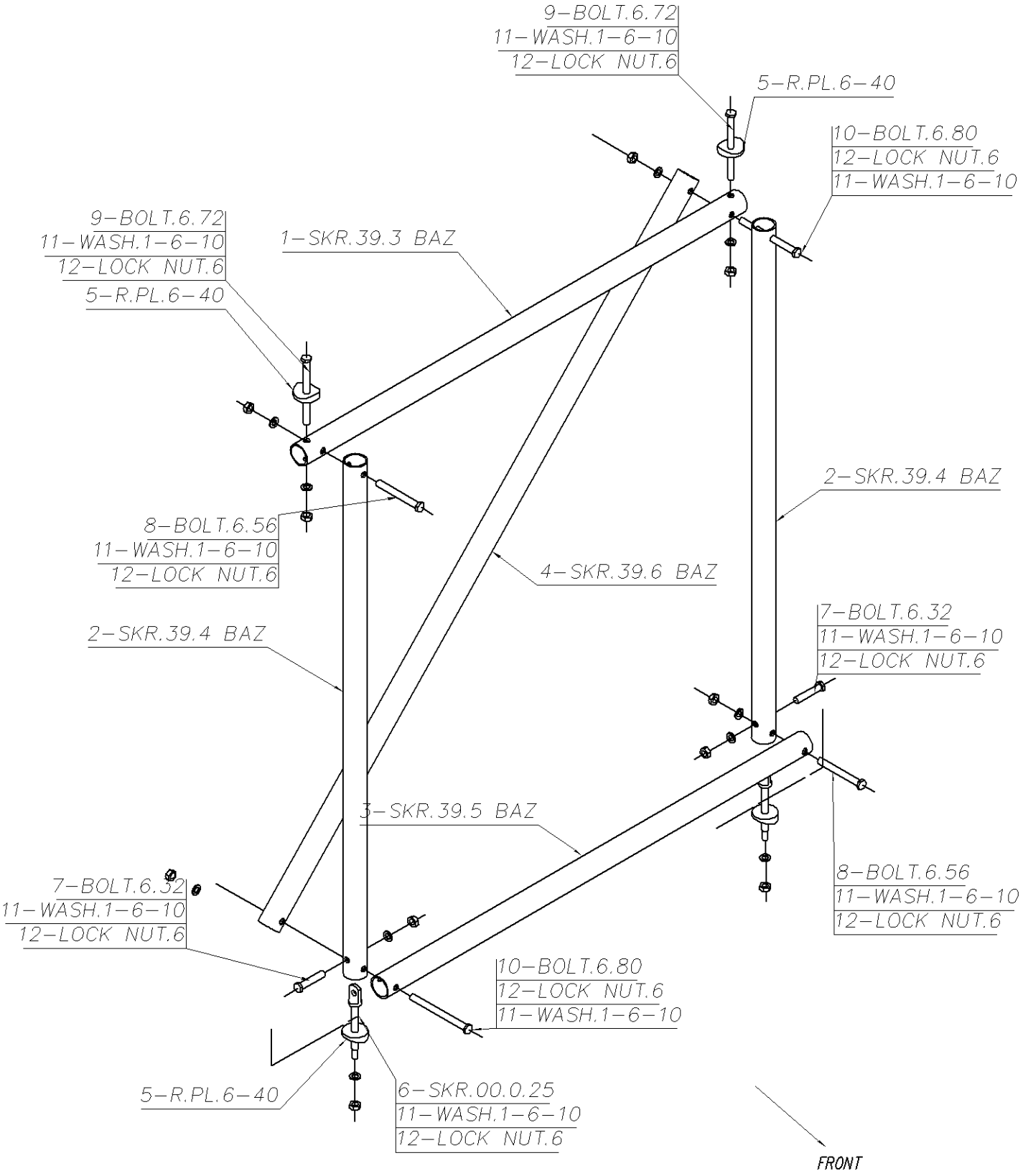
9-BOLT.6.72
11-WASH.1-6-10
12-LOCK NUT.6
5-R.PL.6-40
10-BOLT.6.80
12-LOCK NUT.6
11-WASH.1-6-10
9-BOLT.6.72
11-WASH.1-6-10
12-LOCK NUT.6
5-R.PL.6-40
1-SKR.39.3 BAZ
2-SKR.39.4 BAZ
8-BOLT.6.56
11-WASH.1-6-10
12-LOCK NUT.6
4-SKR.39.6 BAZ
7-BOLT.6.32
11-WASH.1-6-10
12-LOCK NUT.6
2-SKR.39.4 BAZ
3-SKR.39.5 BAZ
8-BOLT.6.56
11-WASH.1-6-10
12-LOCK NUT.6
7-BOLT.6.32
11-WASH.1-6-10
12-LOCK NUT.6
10-BOLT.6.80
12-LOCK NUT.6
11-WASH.1-6-10
5-R.PL.6-40
6-SKR.00.0.25
11-WASH.1-6-10
12-LOCK NUT.6
FRONT

SKR.TK.22 BK

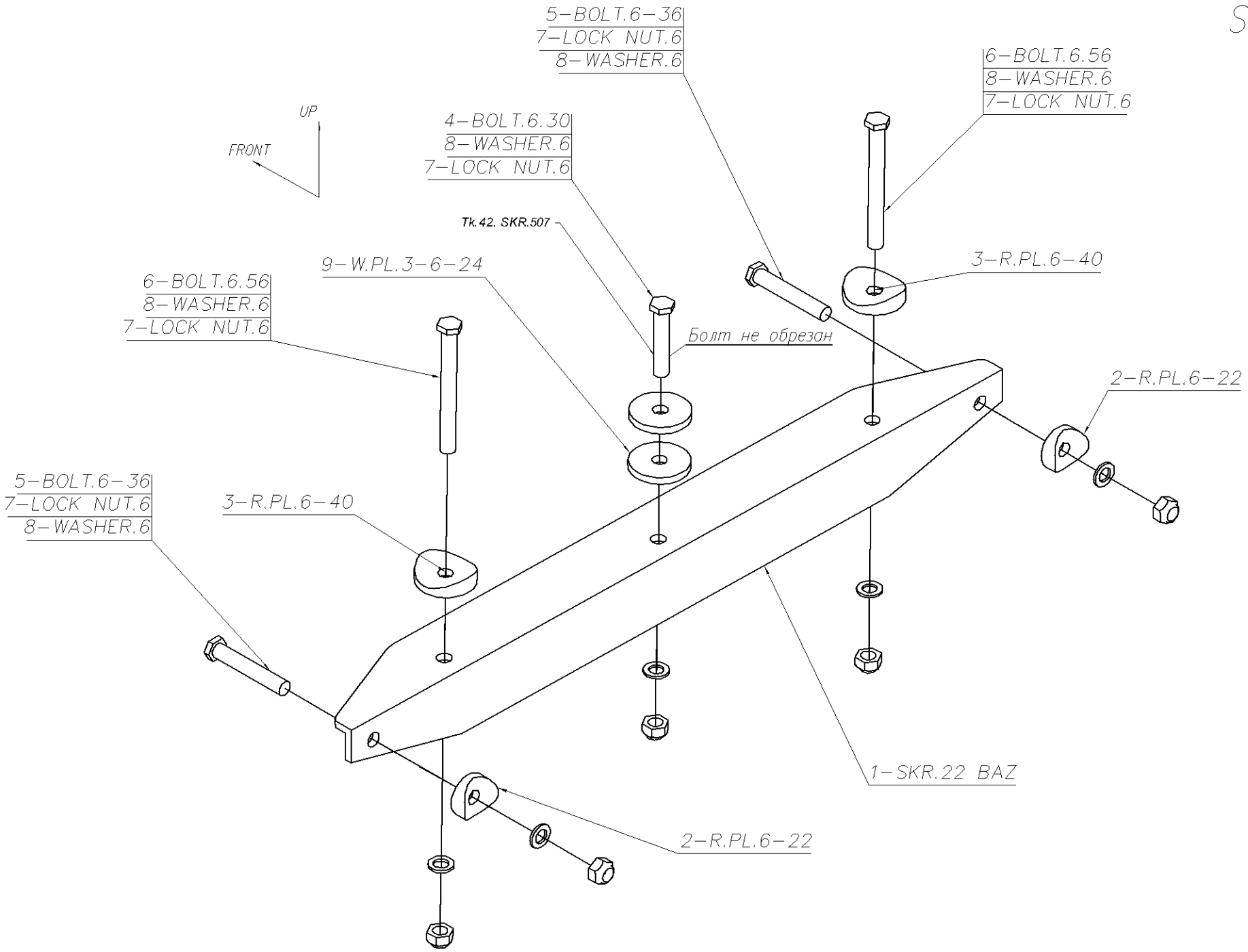
5-BOLT.6-36
7-LOCK NUT.6
8-WASHER.6
6-BOLT.6.56
8-WASHER.6
7-LOCK NUT.6
UP
FRONT
4-BOLT.6.30
8-WASHER.6
7-LOCK NUT.6
Tk.42. SKR.507
9-W.PL.3-6-24
3-R.PL.6-40
6-BOLT.6.56
8-WASHER.6
7-LOCK NUT.6
Болт не обрезан
2-R.PL.6-22
5-BOLT.6-36
7-LOCK NUT.6
8-WASHER.6
3-R.PL.6-40
1-SKR.22 BAZ
2-R.PL.6-22

SKR.TK.22

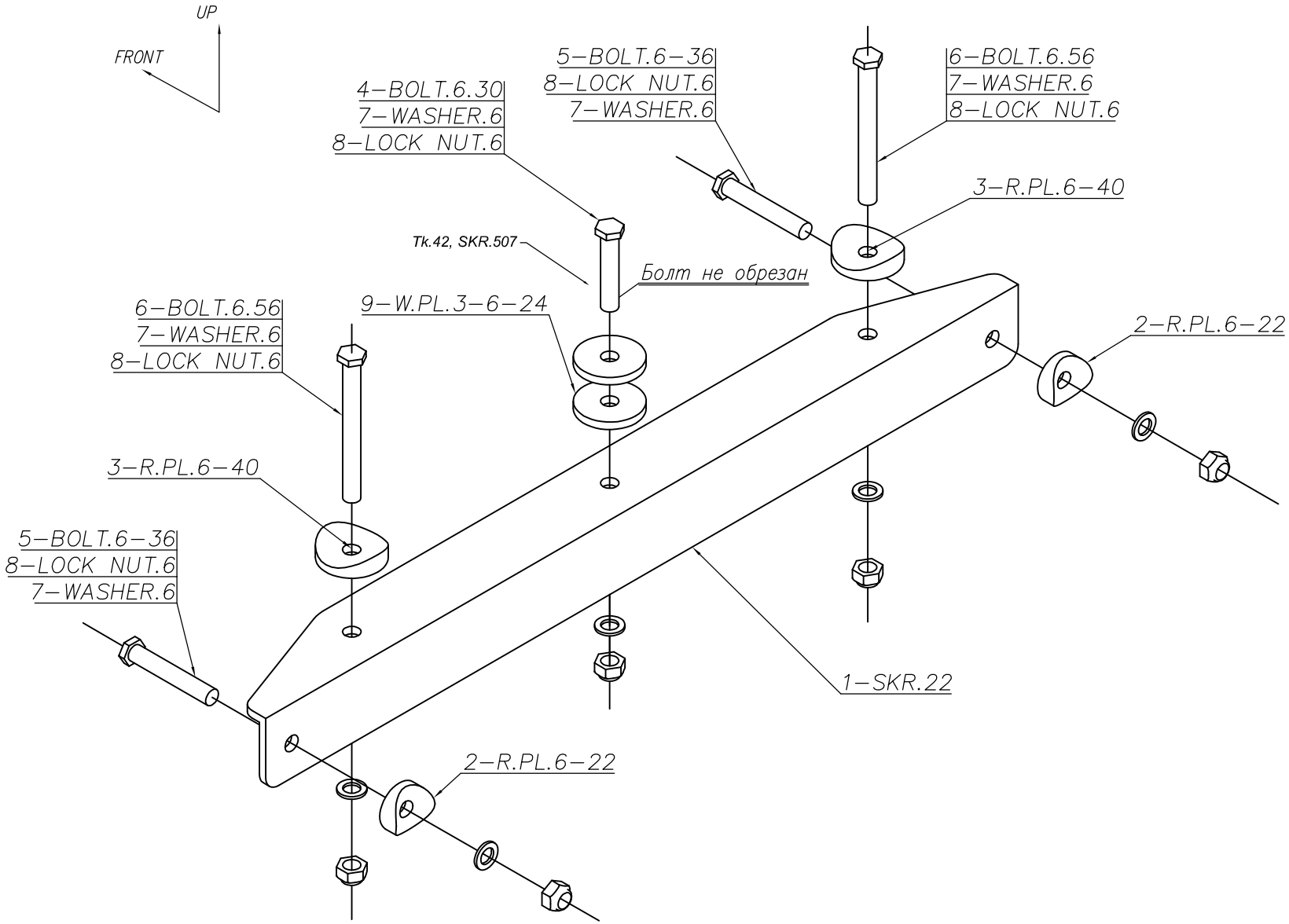
UP
FRONT
4–BOLT.6.30
7–WASHER.6
8–LOCK NUT.6
5–BOLT.6–36
8–LOCK NUT.6
7–WASHER.6
6–BOLT.6.56
7–WASHER.6
8–LOCK NUT.6
3–R.PL.6–40
Tk.42, SKR.507
Болт не обрезан
9–W.PL.3–6–24
6–BOLT.6.56
7–WASHER.6
8–LOCK NUT.6
2–R.PL.6–22
3–R.PL.6–40
5–BOLT.6–36
8–LOCK NUT.6
7–WASHER.6
1–SKR.22
2–R.PL.6–22

SKR. TK.25

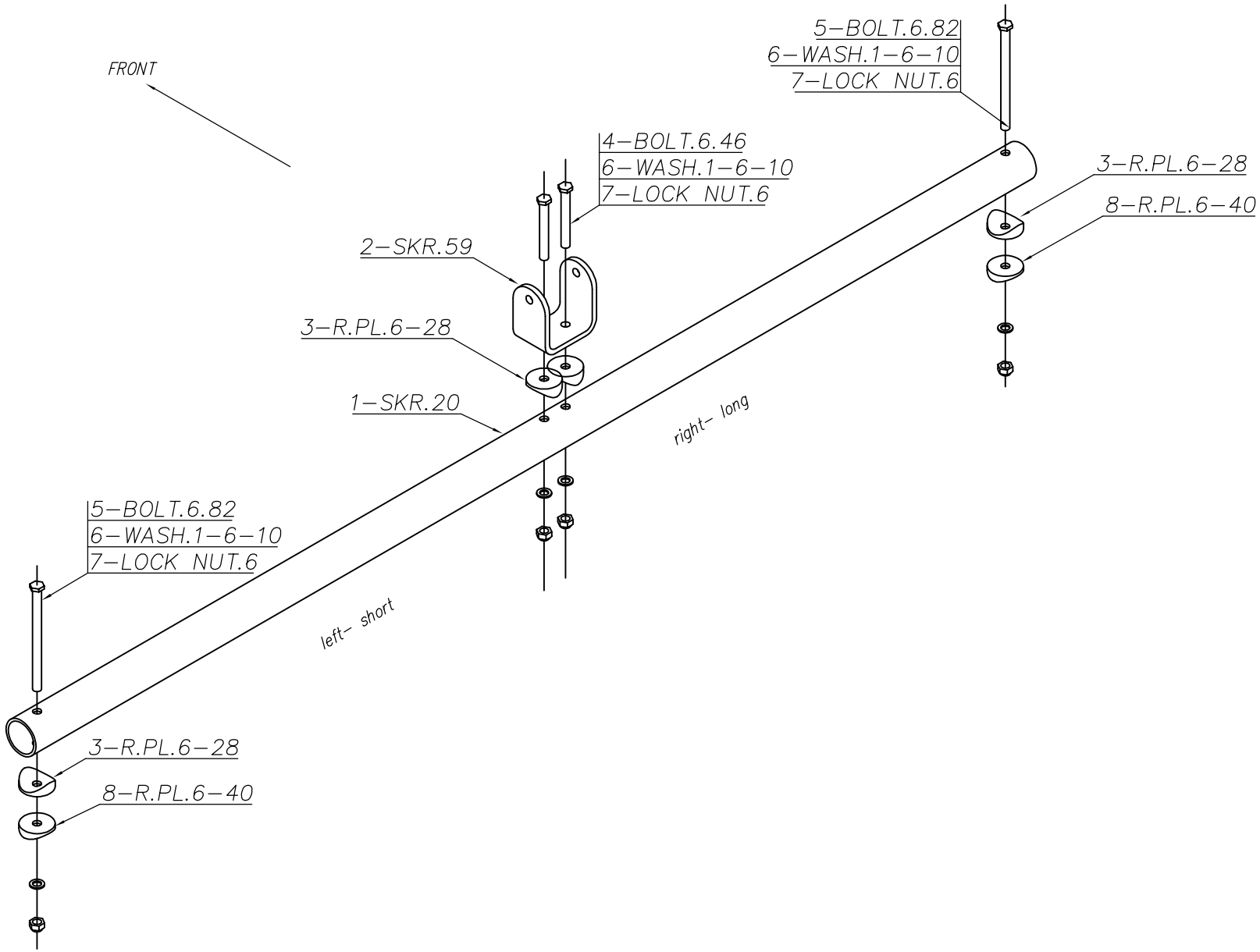
FRONT
5–BOLT.6.82
6–WASH.1–6–10
7–LOCK NUT.6
4–BOLT.6.46
6–WASH.1–6–10
7–LOCK NUT.6
3–R.PL.6–28
8–R.PL.6–40
2–SKR.59
3–R.PL.6–28
1–SKR.20
right– long
5–BOLT.6.82
6–WASH.1–6–10
7–LOCK NUT.6
left– short
3–R.PL.6–28
8–R.PL.6–40