SKR.TK.39

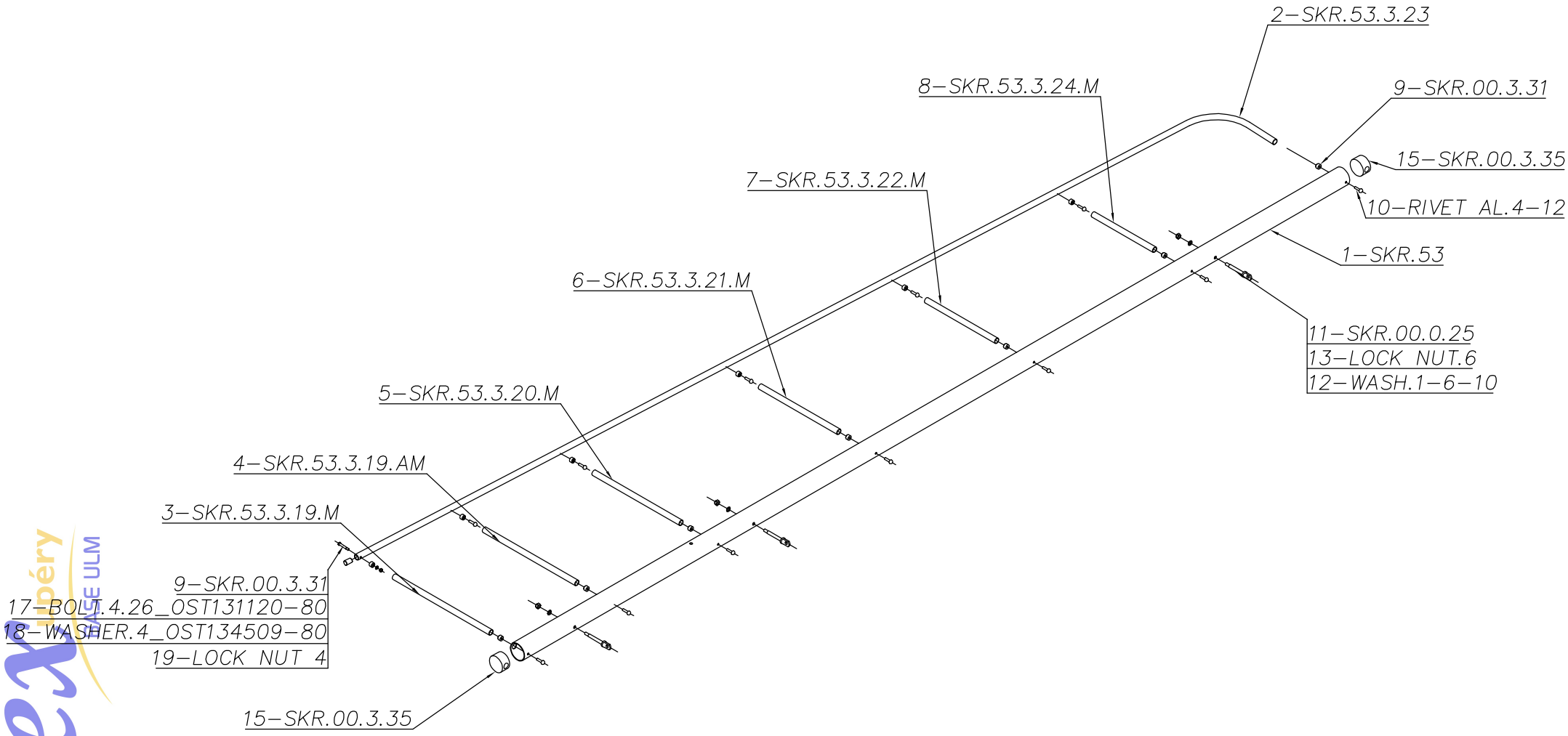
2–SKR.53.3.23
8–SKR.53.3.24.M
9–SKR.00.3.31
15–SKR.00.3.35
7–SKR.53.3.22.M
10–RIVET AL.4–12
1–SKR.53
6–SKR.53.3.21.M
11–SKR.00.0.25
13–LOCK NUT.6
12–WASH.1–6–10
5–SKR.53.3.20.M
4–SKR.53.3.19.AM
3–SKR.53.3.19.M
9–SKR.00.3.31
17–BOLT.4.26_OST131120–80
18–WASHER.4_OST134509–80
19–LOCK NUT 4
15–SKR.00.3.35

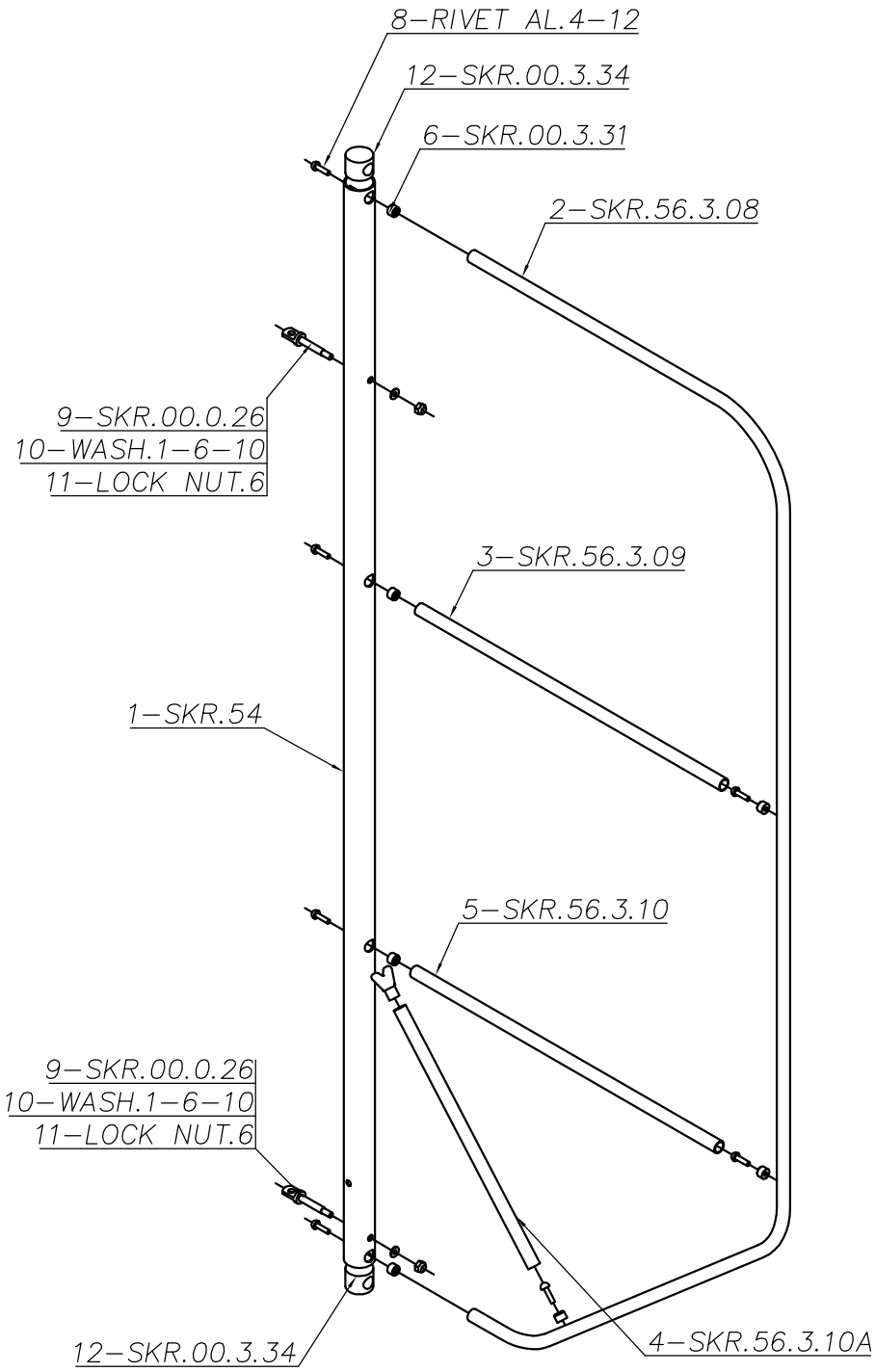
8–RIVET AL.4–12
12–SKR.00.3.34
6–SKR.00.3.31
2–SKR.56.3.08
9–SKR.00.0.26
10–WASH.1–6–10
11–LOCK NUT.6
3–SKR.56.3.09
1–SKR.54
5–SKR.56.3.10
9–SKR.00.0.26
10–WASH.1–6–10
11–LOCK NUT.6
12–SKR.00.3.34
4–SKR.56.3.10A

SKR. TK. 41

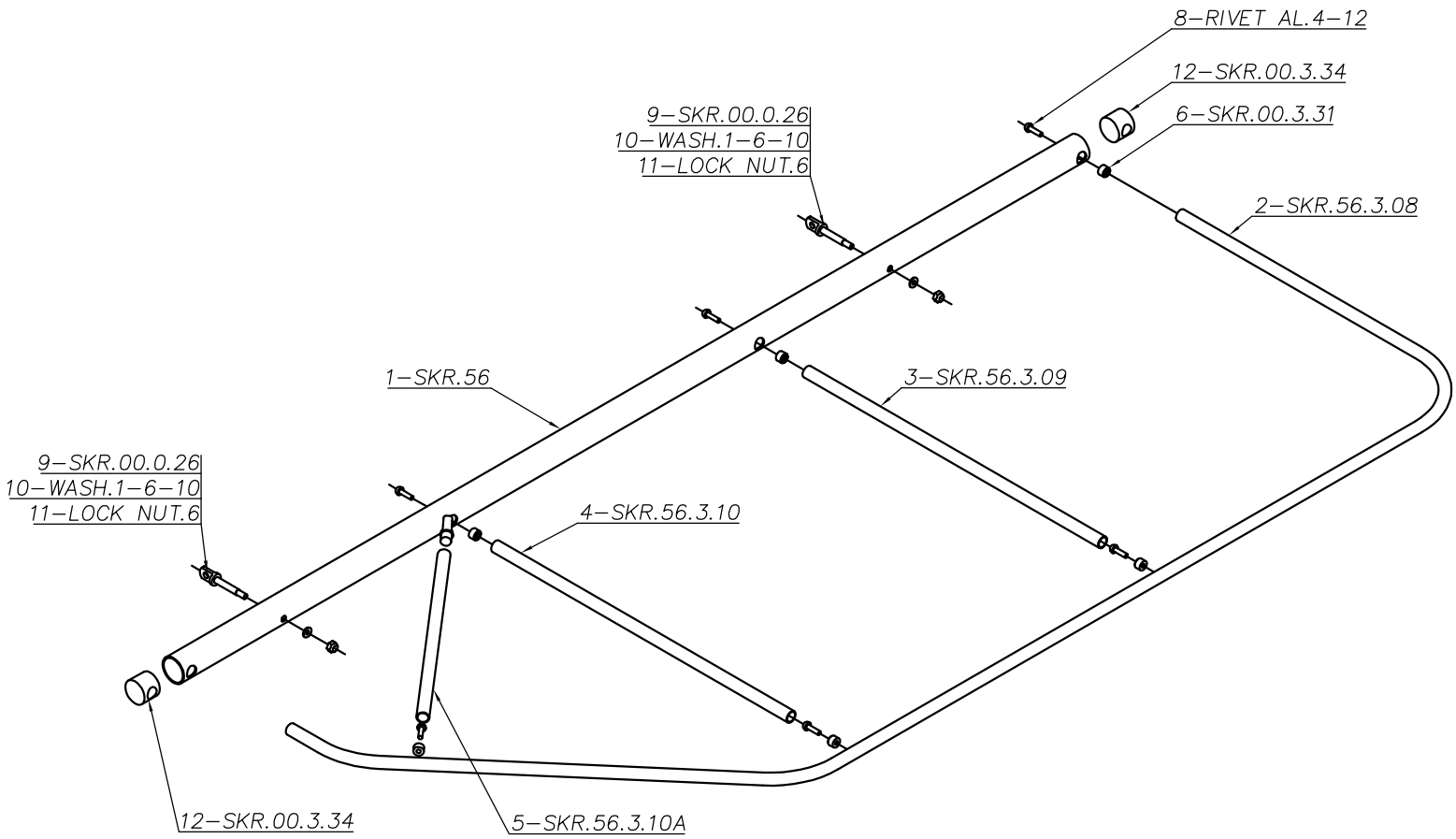
8–RIVET AL.4–12
12–SKR.00.3.34
6–SKR.00.3.31
9–SKR.00.0.26
10–WASH.1–6–10
11–LOCK NUT.6
2–SKR.56.3.08
1–SKR.56
3–SKR.56.3.09
9–SKR.00.0.26
10–WASH.1–6–10
11–LOCK NUT.6
4–SKR.56.3.10
12–SKR.00.3.34
5–SKR.56.3.10A

SKR.TK.42

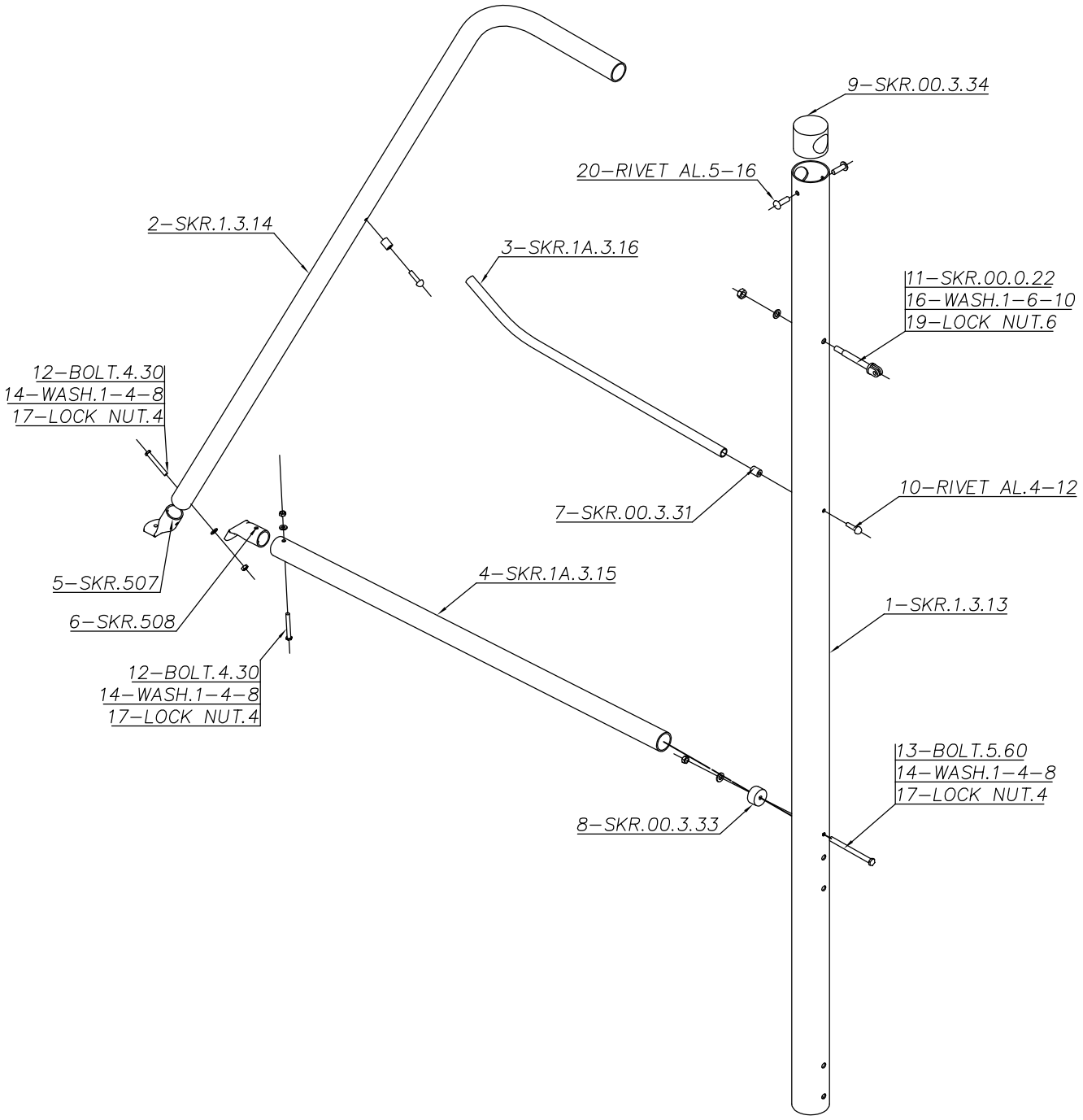
9–SKR.00.3.34
20–RIVET AL.5–16
2–SKR.1.3.14
3–SKR.1A.3.16
11–SKR.00.0.22
16–WASH.1–6–10
19–LOCK NUT.6
12–BOLT.4.30
14–WASH.1–4–8
17–LOCK NUT.4
10–RIVET AL.4–12
7–SKR.00.3.31
5–SKR.507
4–SKR.1A.3.15
6–SKR.508
1–SKR.1.3.13
12–BOLT.4.30
14–WASH.1–4–8
17–LOCK NUT.4
13–BOLT.5.60
14–WASH.1–4–8
17–LOCK NUT.4
8–SKR.00.3.33

SKR.TK.43

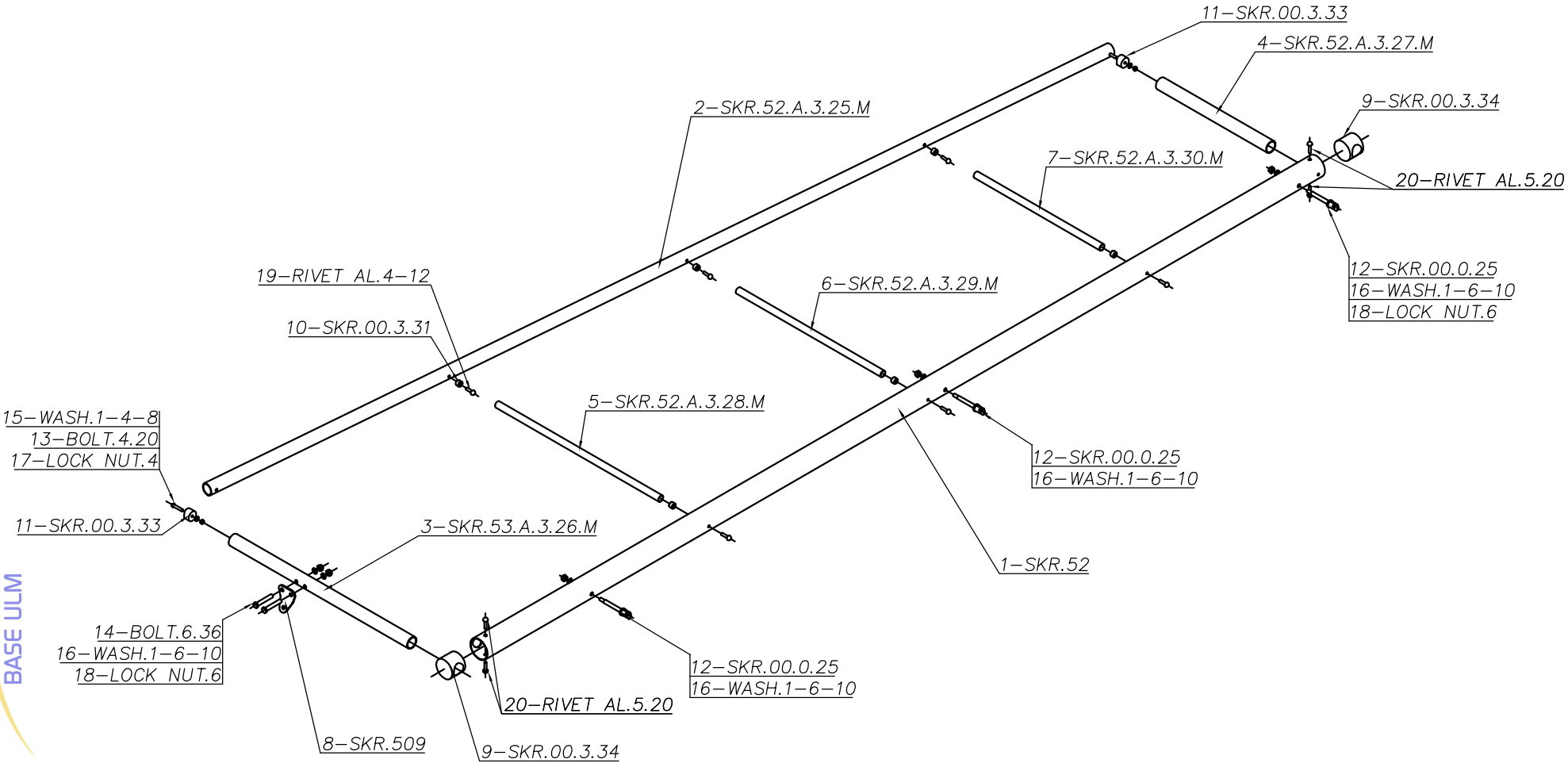
11–SKR.00.3.33
4–SKR.52.A.3.27.M
9–SKR.00.3.34
2–SKR.52.A.3.25.M
7–SKR.52.A.3.30.M
20–RIVET AL.5.20
12–SKR.00.0.25
16–WASH.1–6–10
18–LOCK NUT.6
19–RIVET AL.4–12
6–SKR.52.A.3.29.M
10–SKR.00.3.31
5–SKR.52.A.3.28.M
15–WASH.1–4–8
13–BOLT.4.20
17–LOCK NUT.4
12–SKR.00.0.25
16–WASH.1–6–10
11–SKR.00.3.33
3–SKR.53.A.3.26.M
1–SKR.52
14–BOLT.6.36
16–WASH.1–6–10
18–LOCK NUT.6
12–SKR.00.0.25
16–WASH.1–6–10
20–RIVET AL.5.20
8–SKR.509
9–SKR.00.3.34

SKR. TK. 44

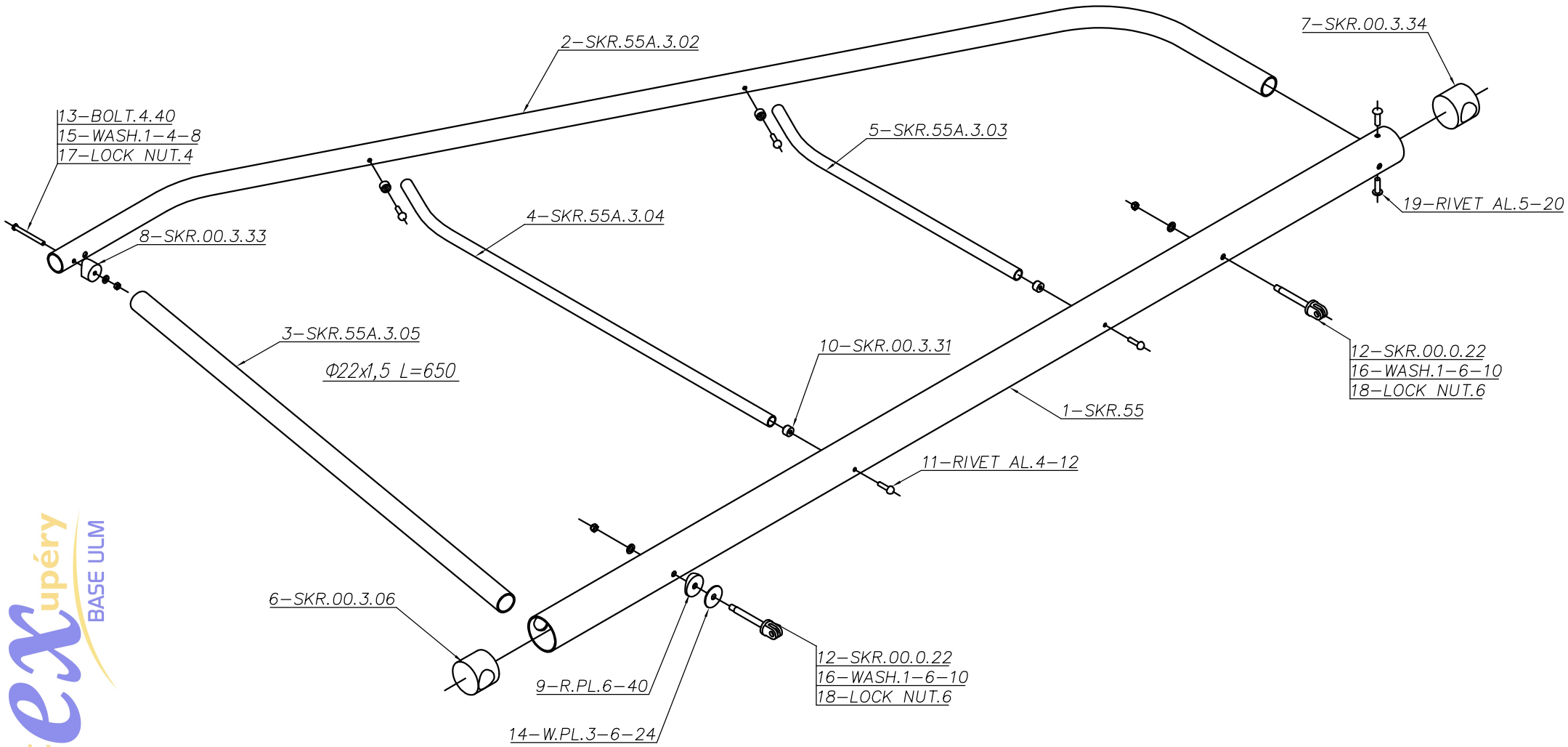
2–SKR.55A.3.02
7–SKR.00.3.34
13–BOLT.4.40
15–WASH.1–4–8
17–LOCK NUT.4
5–SKR.55A.3.03
19–RIVET AL.5–20
4–SKR.55A.3.04
8–SKR.00.3.33
3–SKR.55A.3.05
Φ22x1,5 L=650
10–SKR.00.3.31
12–SKR.00.0.22
16–WASH.1–6–10
18–LOCK NUT.6
1–SKR.55
11–RIVET AL.4–12
6–SKR.00.3.06
12–SKR.00.0.22
16–WASH.1–6–10
18–LOCK NUT.6
9–R.PL.6–40
14–W.PL.3–6–24

SKR.TK.74 BK

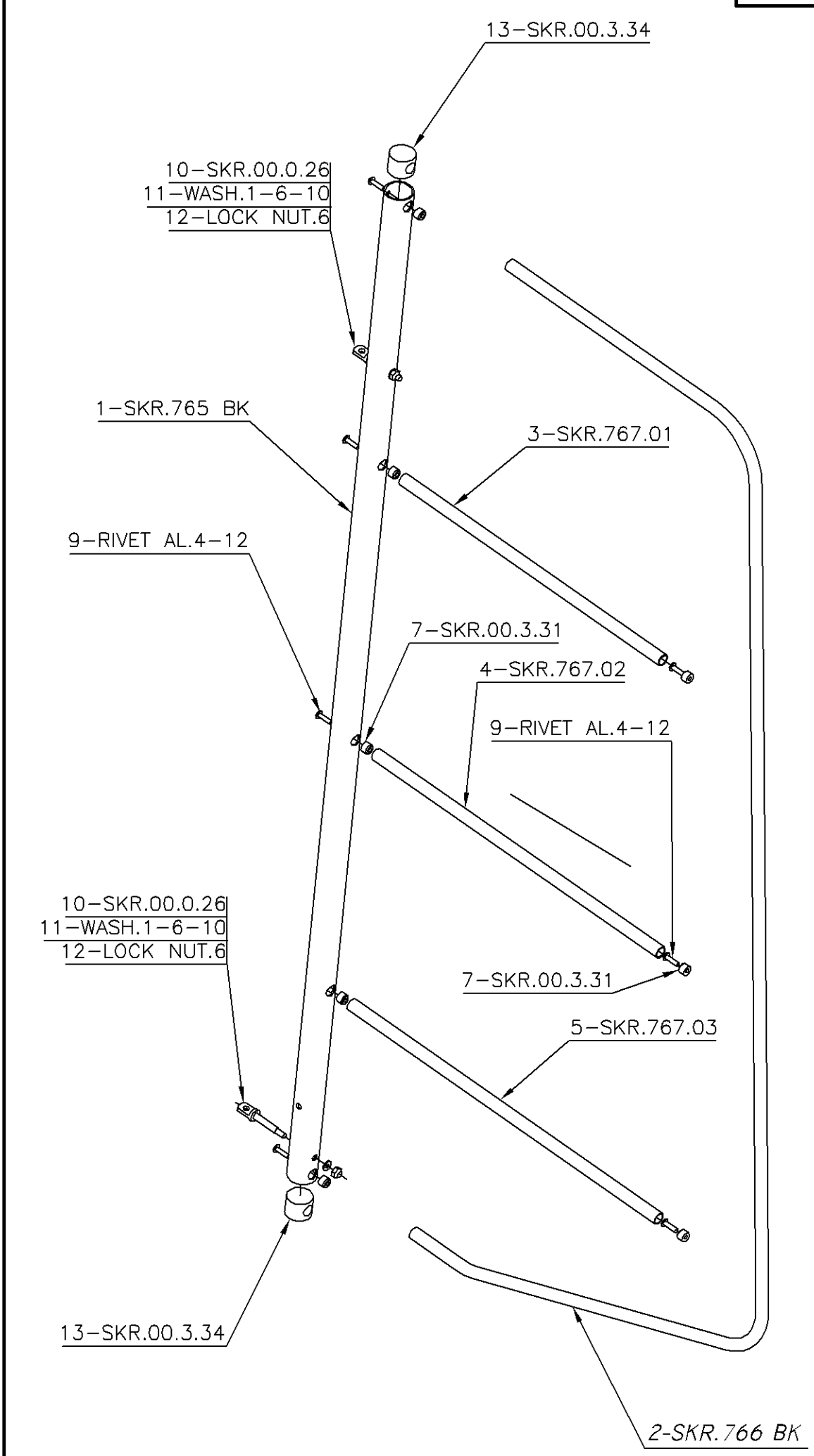
13-SKR.00.3.34
10-SKR.00.0.26
11-WASH.1-6-10
12-LOCK NUT.6
1-SKR.765 BK
3-SKR.767.01
9-RIVET AL.4-12
7-SKR.00.3.31
4-SKR.767.02
9-RIVET AL.4-12
10-SKR.00.0.26
11-WASH.1-6-10
12-LOCK NUT.6
7-SKR.00.3.31
5-SKR.767.03
13-SKR.00.3.34
2-SKR.766 BK

SKR.TK.74

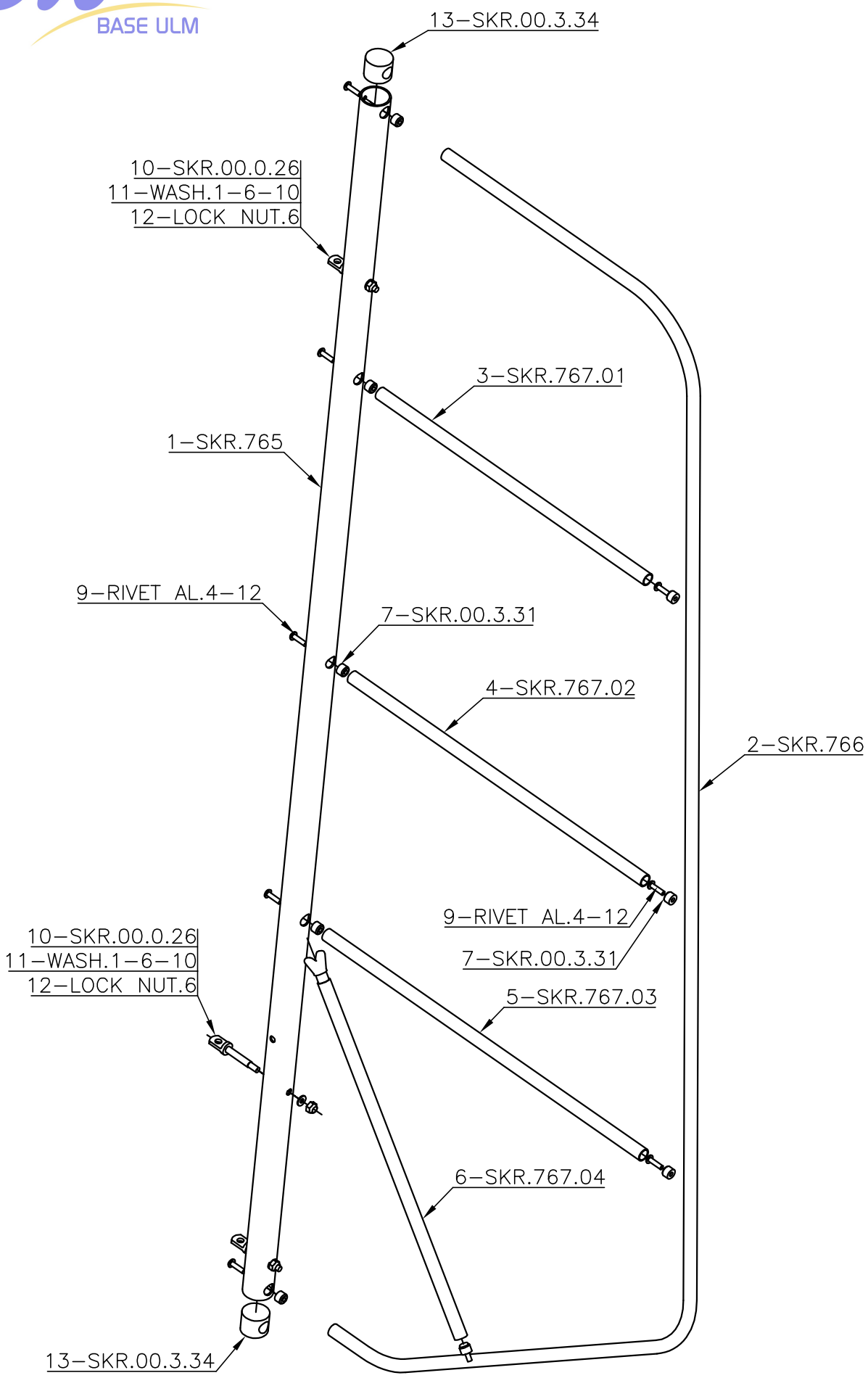
13–SKR.00.3.34
10–SKR.00.0.26
11–WASH.1–6–10
12–LOCK NUT.6
3–SKR.767.01
1–SKR.765
9–RIVET AL.4–12
7–SKR.00.3.31
4–SKR.767.02
2–SKR.766
9–RIVET AL.4–12
7–SKR.00.3.31
10–SKR.00.0.26
11–WASH.1–6–10
12–LOCK NUT.6
5–SKR.767.03
6–SKR.767.04
13–SKR.00.3.34